PINNACLE
ROOF TURBINE VENTILATOR

"We Move Air"

The Curvent Pinnacle ventilator is a natural roof turbine ventilator offering continuous ventilation with no operating costs. The turbine head starts spinning when heat is extracted through the turbine throat. The spinning turbine head, assisted by the wind, creates an extraction vortex below that will remove hot stale air from the building. Cool fresh air is then replaced through louvres and other openings at low level, vastly improving indoor air quality. The ventilator is designed to fit any roof profile. The Curvent Pinnacle roof turbine ventilator is guaranteed for 5 years and is renowned for its extremely robust construction. Its continuous natural ventilation capabilities require minimal maintenance, making this ventilator the most cost-effective system to naturally ventilate any building. Available in slope mounted units or ridge mounted units, the low profile construction and curved blades offer appealing aesthetic.

Product Materials Finishes:

- Galvanised
- Zincalume
- Aluminum
- Powder Paint

Optional Accessories

- Ceiling Grilles Adaptors
- Ridge Adaptors
- Flexible Duct Adaptors
- Short Throat
- Trimmers

Product Features

- Ridge or Slope Mounted Units Available
- Reduce Building Structural Fatigue
- Extremely Robust Construction
- Material Finish Alternatives
- Increase Indoor Air Quality
- 5 Year Product Guarantee
- Cost-effective Ventilation
- Continuous Extraction
- Superior Aesthetics
- No Operating Cost

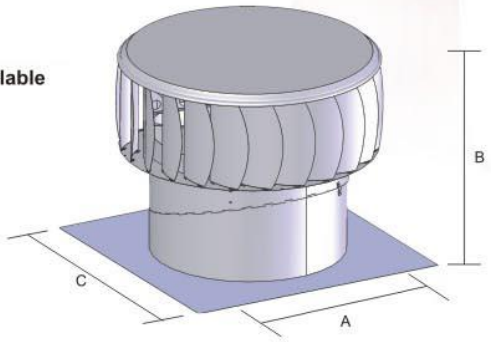

Model type	CPT 250	CPT 300	CPT 350	CPT400	CPT 500	CPT610
Troat dimension (A) in mm	250	300	350	400	500	610
Overall Height (B) in mm	440	465	470	640	600	640
Head Dimensions	370	440	520	560	670	810
Base Plate Dimensions (C) in mm	400	500	550	600	750	850
Maximum Installation Angle	45°	45°	45°	45°	45°	40°
Mild Steel Mass (Kg)	13	15	18	20	22	25
Box Dimensions (mm)	500W x 500L x500H	500W x 500L x500H	620W x 620L x 650H	620W x 620L x 650H	880W x 880L x 670 H	880W x 880L x 670 H
Estimated extraction Capacity at 15 km/h	1265m³/h	1495m³/h	1874m³/h	3596m³/h	4498m³/h	6815m³/h
Floor area coverage per unit	32m²	38m²	50m²	96m²	120m²	180m²

SPECIFICATION PROCEDURE:

The volume of space to be ventilated is estimated and multiplied by the number of air changes per hour and divided by the extraction rates of the roof turbine. The table gives a guide to the number of air changes generally recommended taking into consideration grater air changes due to the nature of the application.

(Source: BB Daly; Woods Practical Guide to Fan Engineering; 3rd Edition; 1978; p.14)

Typical Situations	Air Changes
Residences, Churches, Storage Areas	1-2
Libraries, Banks, Classrooms	2-4
Offices, Assembly Halls, Laboratories	4-6
Hospital Wards, Treatment Rooms, WC's, Bars	6-8
Theatres, Cinemas, Garages, Workshops	6-10
Cafes, Canteens, Dance Halls	8-12
Restaurants, Domestic Kitchens, Laundries	10-15
Bakeries, Boiler Houses, Engine Rooms	15-30
Paint Shops, Foundries, Furnace Rooms	30-60

1) Select the Model in accordance with the ventilation requirements
2) Select the ventilator material type (i.e. Aluminium, Chromadek or Galvanised)
3) Select any accessories required (Trimmers etc.)

EXAMPLE:

A specification for a 260m² room with a roof height of 6m with 10 air changes per hour natural ventilation required, manufactured in Aluminum material with Trimmers would be:

CALCULATION:

Area x Roof Height x Air Changes per Hour ÷ Extraction Rate 260m² x 6m x 10 ÷ 3900 (Extraction rate of the Curvent Pinnacle CPT400) = 4 x Curvent Pinnacle type CPT400 Roof Turbine Ventilators

SPECIFICATION DESCRIPTION:

4 x Curvent Pinnacle type CPT400 roof turbine ventilators, Aluminium material with Trimmers, installed in accordance with the manufacturers detailed instructions:Curvent International (Pty) Ltd, Tel: +27 11 826 5959 Fax: +27 11 826 3275
e-mail: sales@curvent.co.za

Head Office: Gauteng

Tel: +27 (0)11 826 5959
Fax: +27 (0)11 826 3275
75 North Rand Road, Hughes,
Boksburg, 1459
P.O. Box 26662
East Rand
1462
South Africa

CURVENT
INTERNATIONAL (PTY) Ltd
Ventilation & Fire Ventilation Specialists
Est. 1984
National Call Centre: 08610 VENTS
08610 83687
www.curvent.co.za
sales@curvent.co.za